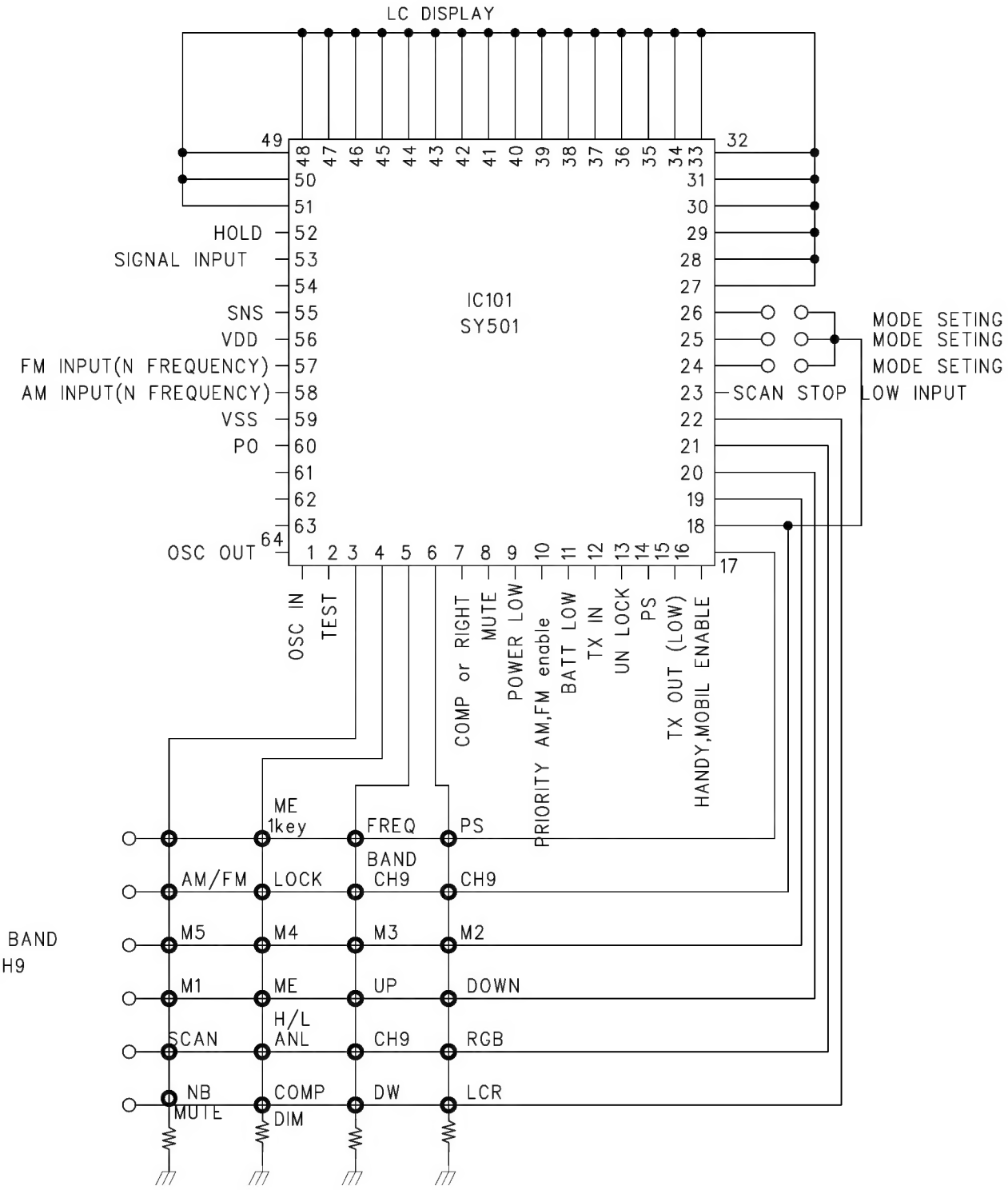


## MDDE SETING CHART

| 24 | 25 | 26 | FREQUENCY |
|---|---|---|---|
| L | L | L | BZT |
| L | L | H | POL 120 CH |
| L | H | L | UK 80CH |
| H | L | L | 43MHz(24,224CH) |
| L | H | H | POL 240 CH |
| H | H | L | 400CH |
| H | L | H | 240 CH |
| H | H | H | 40 CH |

L – OPEN
H – SHORT

* NOTE *

CH9/BAND – EXTENDED BAND
– STANDARD CH9

CH9 – STANDARD CH